SAGE POINT

Building 812

LEVEL 1

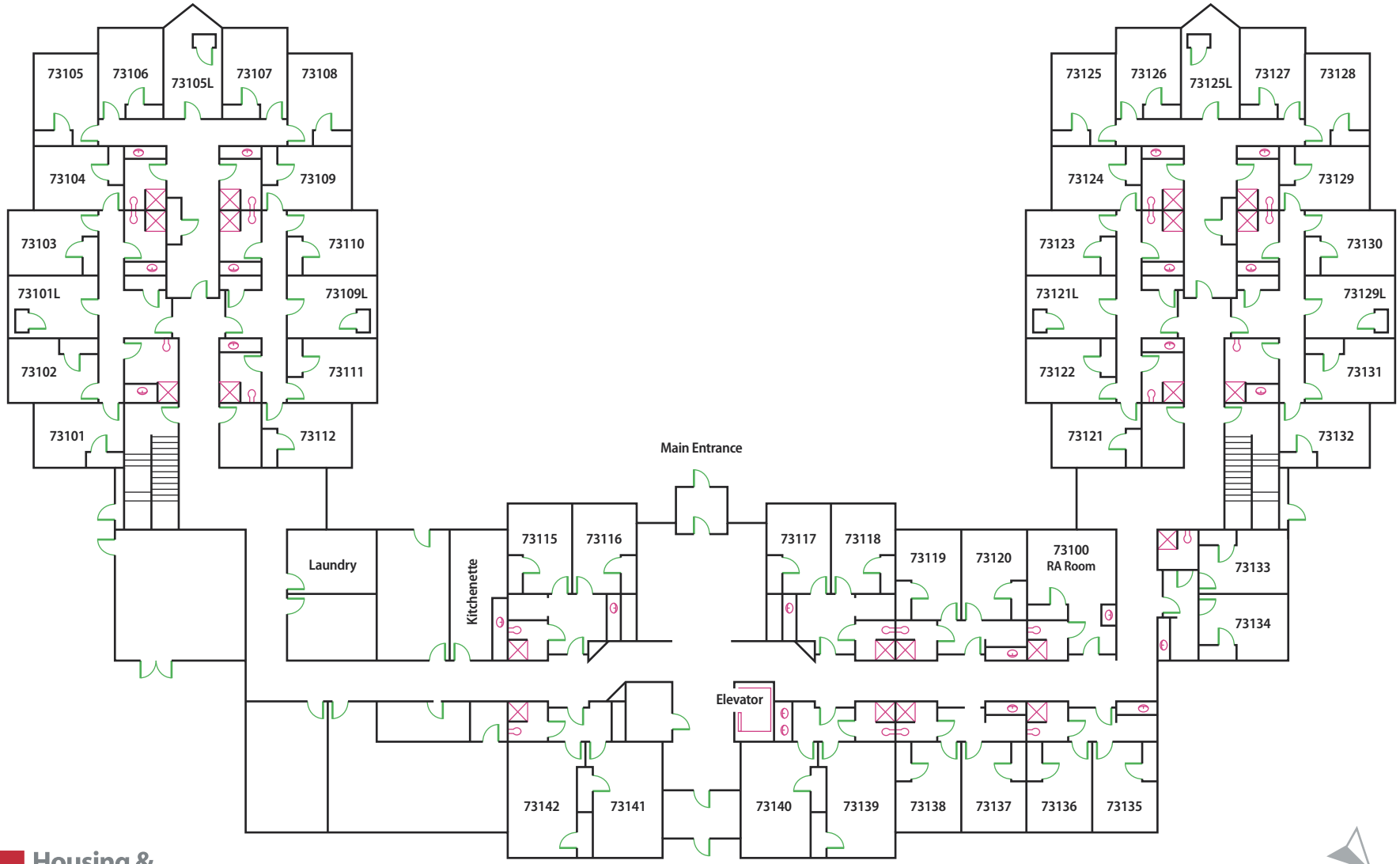

Housing & Residential Education
THE UNIVERSITY OF UTAH

*These floor plans are approximate only and may not reflect actual configurations.

SAGE POINT

Building 812

LEVEL 2

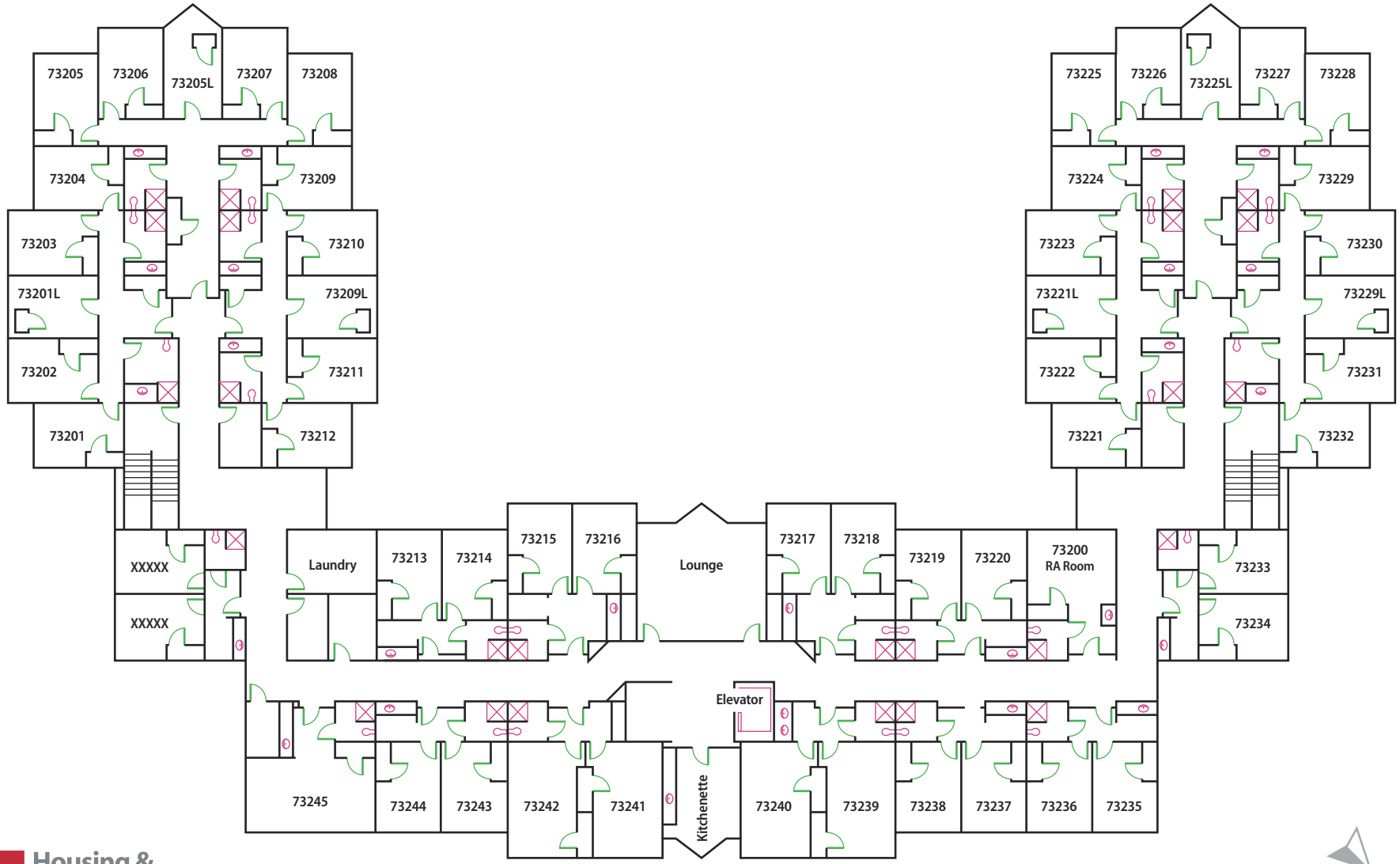

Housing & Residential Education
THE UNIVERSITY OF UTAH

*These floor plans are approximate only and may not reflect actual configurations.

SAGE POINT

Building 812

LEVEL 3

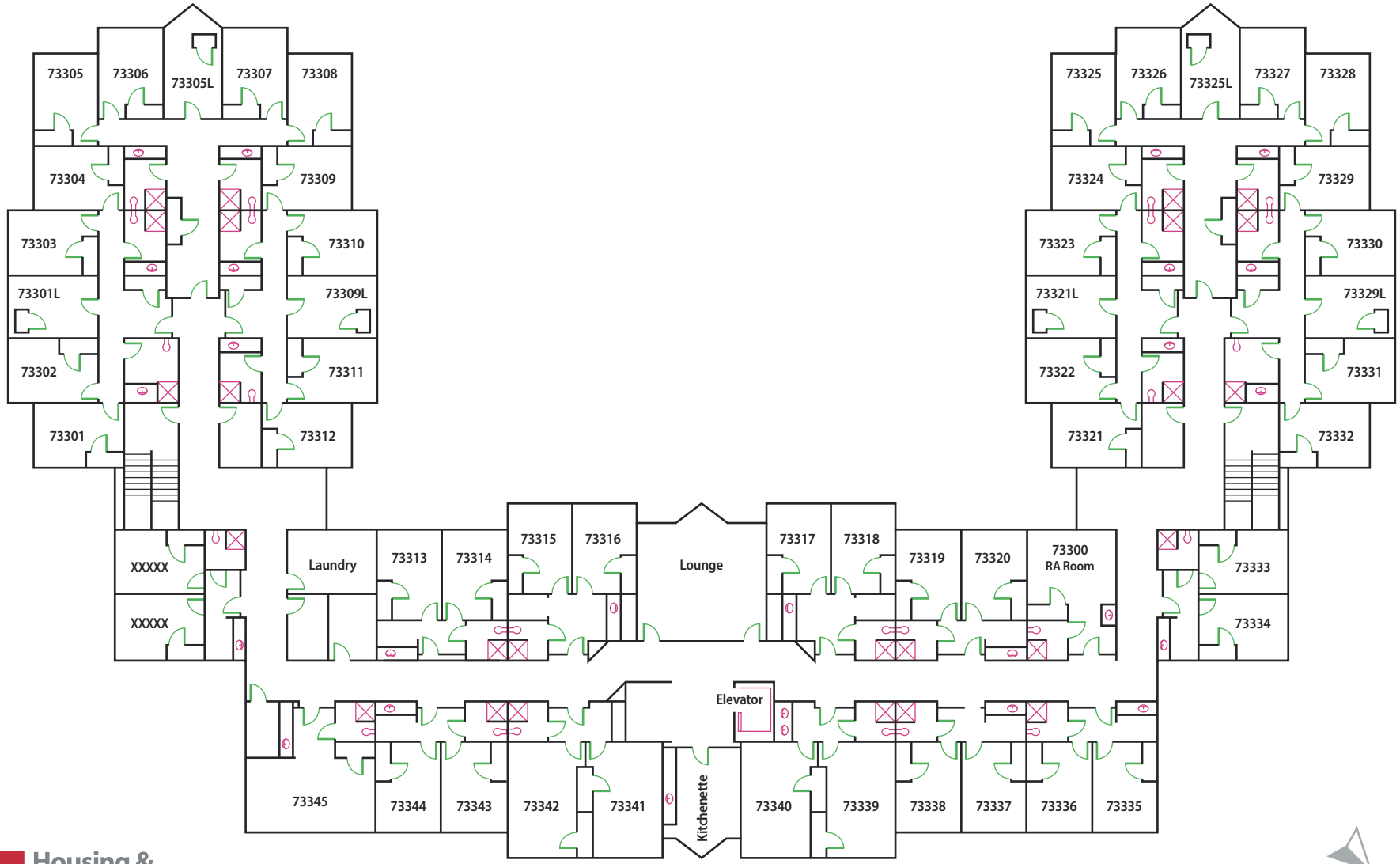

Housing & Residential Education
THE UNIVERSITY OF UTAH

*These floor plans are approximate only and may not reflect actual configurations.